PRESSURE GAUGE ISOLATOR VALVE PUSH TO READ

400 BAR Rated

Materials

Body	Steel 9SMn28K
Seal	NITRIL (Others on Request)
Stem	Steel
Handle	ABS Plastic
Temp. Range	-20 TO +100°C

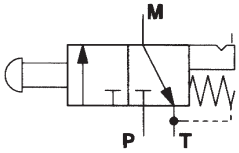

PANEL MOUNTED

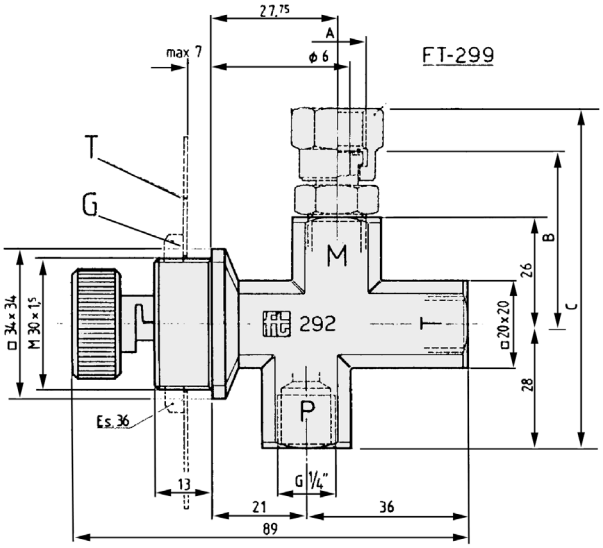

A	G1/4"
B	45
C	80

	Article no.
Valve	206010
Panel nut	207001
Nameplate	206015

MANIFOLD MOUNTED

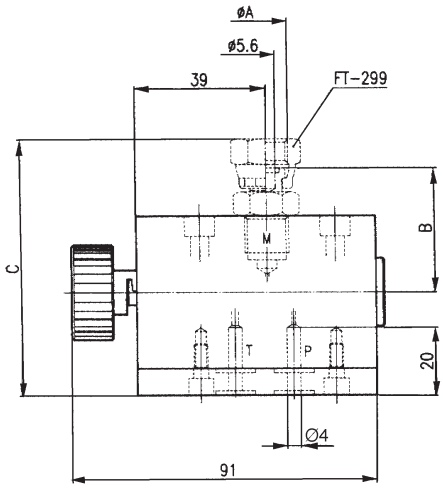

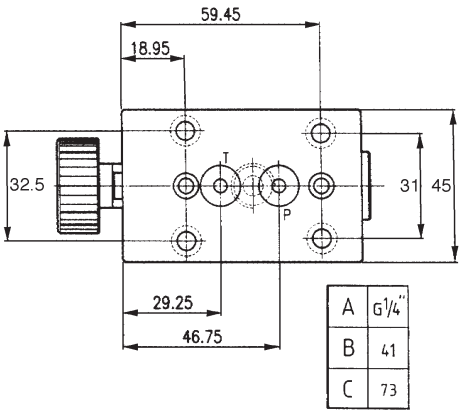

A	G1/4"
B	41
C	73

Article no.
206012